blendmount.com
1-888-497-8388
help@blendmount.com

BMG-3017

INSTALLATION INSTRUCTIONS FOR ESCORT/COBRA EZ MAG MOUNT RADAR DETECTORS

LEFT HAND DRIVE VEHICLE

THIS MOUNT MUST BE INSTALLED FROM THE PASSENGER SIDE

Your rear view mirror has minimal clearance between the back side of the mirror and the mirror stem. It is very important that this mount is installed correctly to ensure mirror adjustability is retained.
PLEASE READ THESE INSTRUCTIONS THOROUGHLY BEFORE INSTALLING THIS MOUNT

NOTE: For illustration purposes, the mount and rear view mirror shown in these instructions may look slightly different then YOUR mount and rear view mirror.

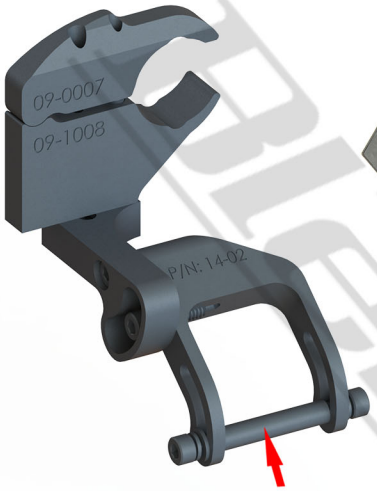

1 The magnet must be removed from the suction cup mount that the radar detector came with.

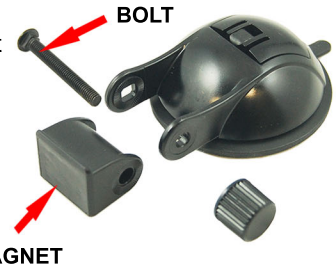

2 Unscrew and remove bolt, only the magnetic piece is used with the BlendMount.

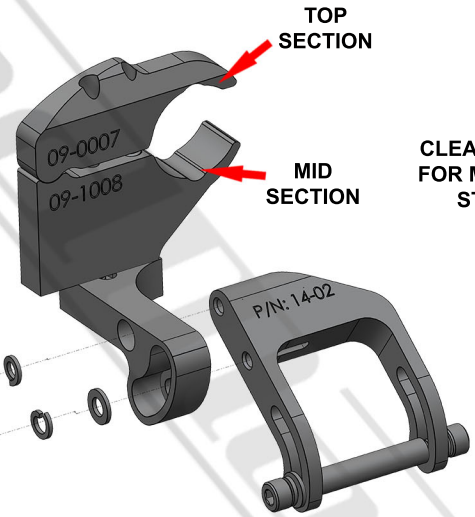

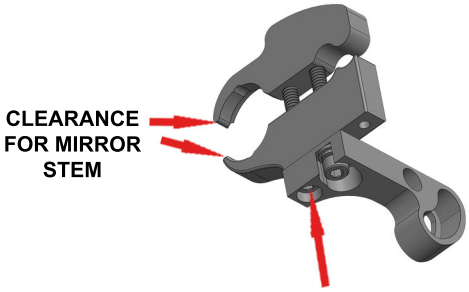

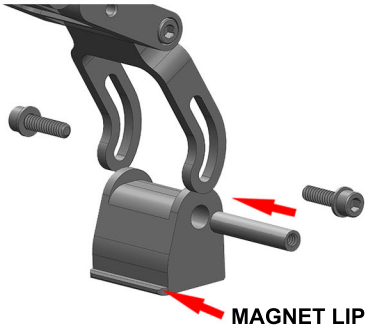

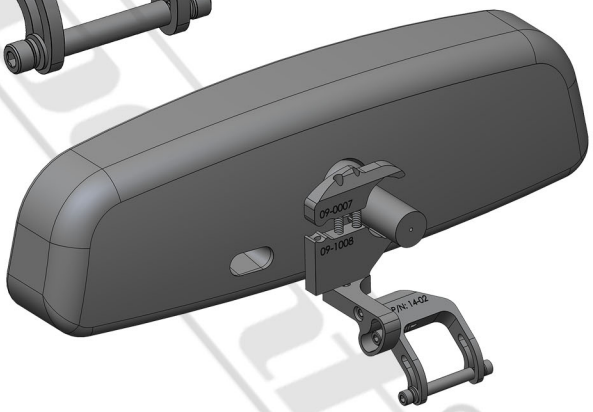

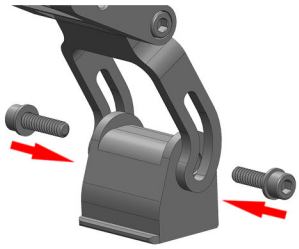

3 Install aluminum threaded insert into magnet, and attach magnet onto BlendMount with lip pointed in direction as shown.

4 Loosen the Clamp Screw so there is enough clearance between the TOP and MID SECTIONS to slide over the mirror stem. (P/N should be facing towards the windshield)

PART# BMG-3017

BlendMount®
Innovative Mounting Solutions

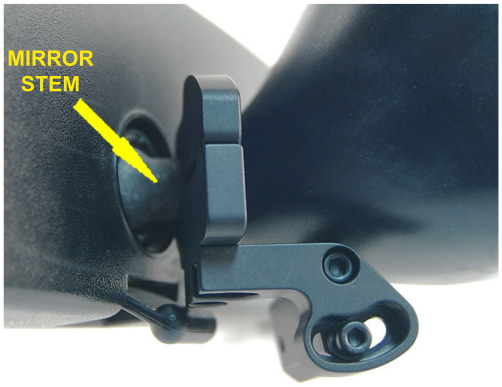

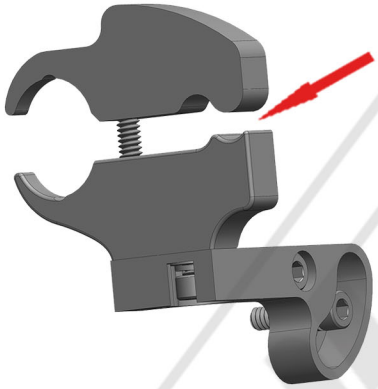

TOP AND MID SECTIONS MUST TOUCH AT THE PIVOT POINT BEFORE CLAMP SCREW IS FULLY TIGHTENED

5 While sitting in the passenger seat, place the mount over the mirror stem. Tighten the CLAMP SCREW until the mount starts to clamp onto the mirror stem. Position the mount as far forward as it will go and parallell to the bottom of the mirror before fully tightening.

6 **MAKE SURE THE TOP AND MID SECTIONS ARE TOUCHING AT THE PIVOT POINT**. If you can not get them to touch at the pivot point, you may have an **incompatible mirror type for this mount.**

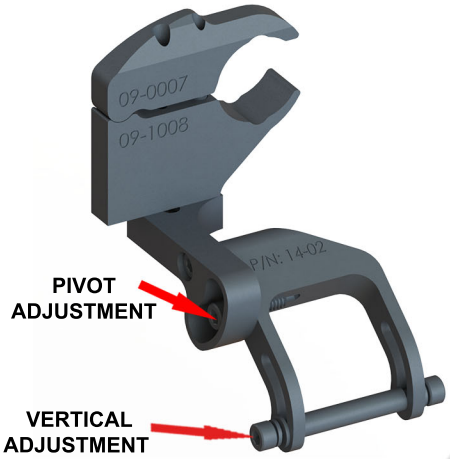

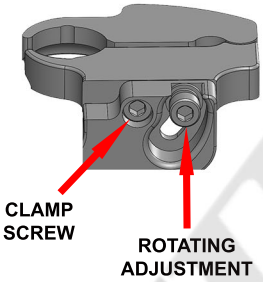

PUSH UP ON FACE AND TWIST TO REMOVE

7 Reinstall the body assembly. Be sure to include all lock washers with screws, and the lock and flat washer with the bottom socket head screw as shown above. Use the adjustments shown above to adjust the RD to your desired position. Leave enough room below bottom of mirror to allow access to top radar detector buttons. Be sure to tighten all screws after adjustments are made.

8 To remove the radar from the magnetic mount, simply tilt the face of the RD up and twist slightly to side, then the magnet will release.

CAUTION

DO NOT use this mount if it interferes with the adjustability or the operation of your rear view mirror in any way.
DO NOT use this mount if the radar detector creates an unsafe viewing obstruction.
DO NOT ATTEMPT TO MODIFY THIS PRODUCT. Consult the manufacturer for assistance.
All BlendMount products are accompanied with detailed installation instructions and adjustment tips. You are encouraged to contact customerservice@blendmount.com or call J28 Design at 1-888-497-8388 for further assistance.

Check the BlendMount Forum for installation tips and some vehicle specific installs.
www.blendmount.com

Your feedback is very important to us. Please email any questions or comments you have to **customerservice@blendmount.com**

J28 DESIGN
Innovative Design And Precision Manufacturing

BlendMount - US PATENT # D625,580 S, D656,811 S, D653,980 S and other patents pending